Littelfuse®
Expertise Applied | Answers Delivered

ONE CIRCUIT PUSH PULL SWITCHES

Cole Hersee® A Littelfuse® Brand

5007

5011

Specifications Overview

Positions:	2: In (Off) - Out (On)
Housing:	Plated Steel
Termination:	2 Screws
Voltage Rating:	10A at 12V DC

Applications

- Construction Equipment
- Agricultural Equipment
- Material Handling Equipment
- Transit and Commercial Vehicles

Description

Littelfuse Push Pull Switches are designed for universal applications within harsh environments. Their mounting, body, and actuator features are designed for ease-of-use and extended product lifecycle.

The One Circuit Push Pull Series provide discrete positions for pre-determined circuit closures. These heavy duty switches are designed for universal applications.

Web Resources

Download 2D print and technical resources at:
littelfuse.com/OneCircuitPushPullSwitches

Dimensions in MM

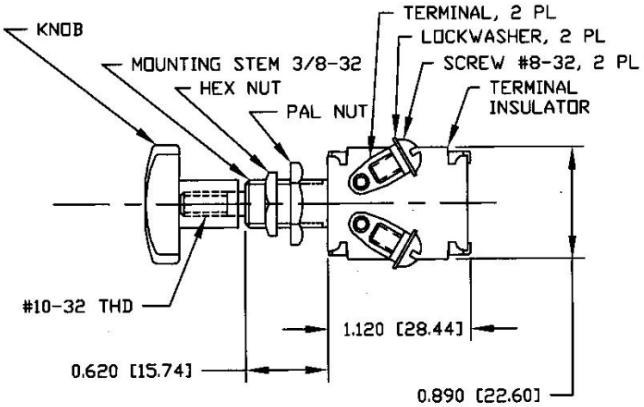

* Dimensions shows for 5007, Dimensions may vary per part number

Ordering Information

PART NUMBERS	DESCRIPTION	CIRCUITRY	HOUSING	MOUNTING	VOLTAGE RATING	ACTUATOR
5007 *	One Circuit Push Pull Switch	SPST	Plated Steel	Hex Nut through 0.375 (9.525mm)-32 Panel Hole	10A at 12V DC	Tan Plastic Knob (Push Pull)
5011 *	One Circuit Push Pull Switch	SPST	Plated Steel	Hex Nut through 0.50 (12.7mm)-2032 Panel Hole	10A at 12V DC	Chrome-Plated Brass Knob (Push Pull)

* Box and Retail Blister Pack Available

Visit **Littelfuse.com** for the most up-to-date product information. Littelfuse products are designed for specific applications and should not be used for any purpose (including, without limitation, automotive applications) not expressly set forth in applicable Littelfuse product documentation. Warranties granted by Littelfuse shall be deemed void for products used for any purpose not expressly set forth in applicable Littelfuse product documentation. Littelfuse shall not be liable for any claims or damages arising out of products used in applications not expressly intended by Littelfuse as set forth in applicable Littelfuse product documentation.

© 2019 Littelfuse Commercial Vehicle Products
Rev: 021219